Fromac
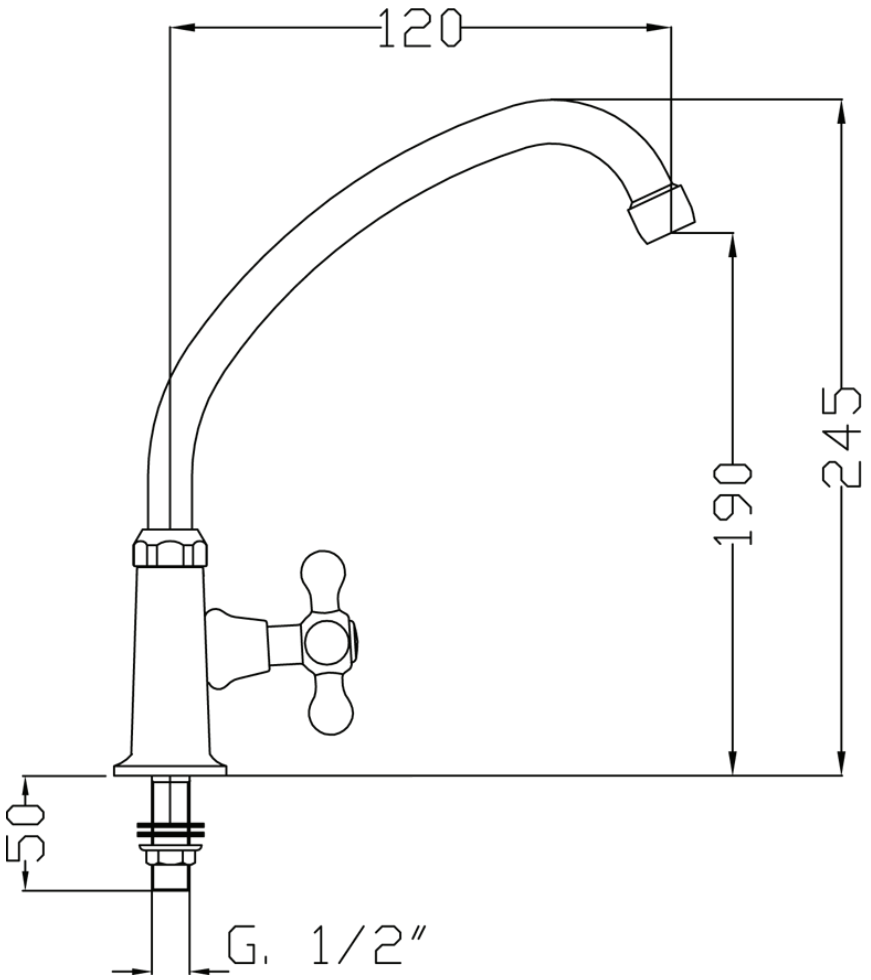
Sterling - art 2432