Fromac
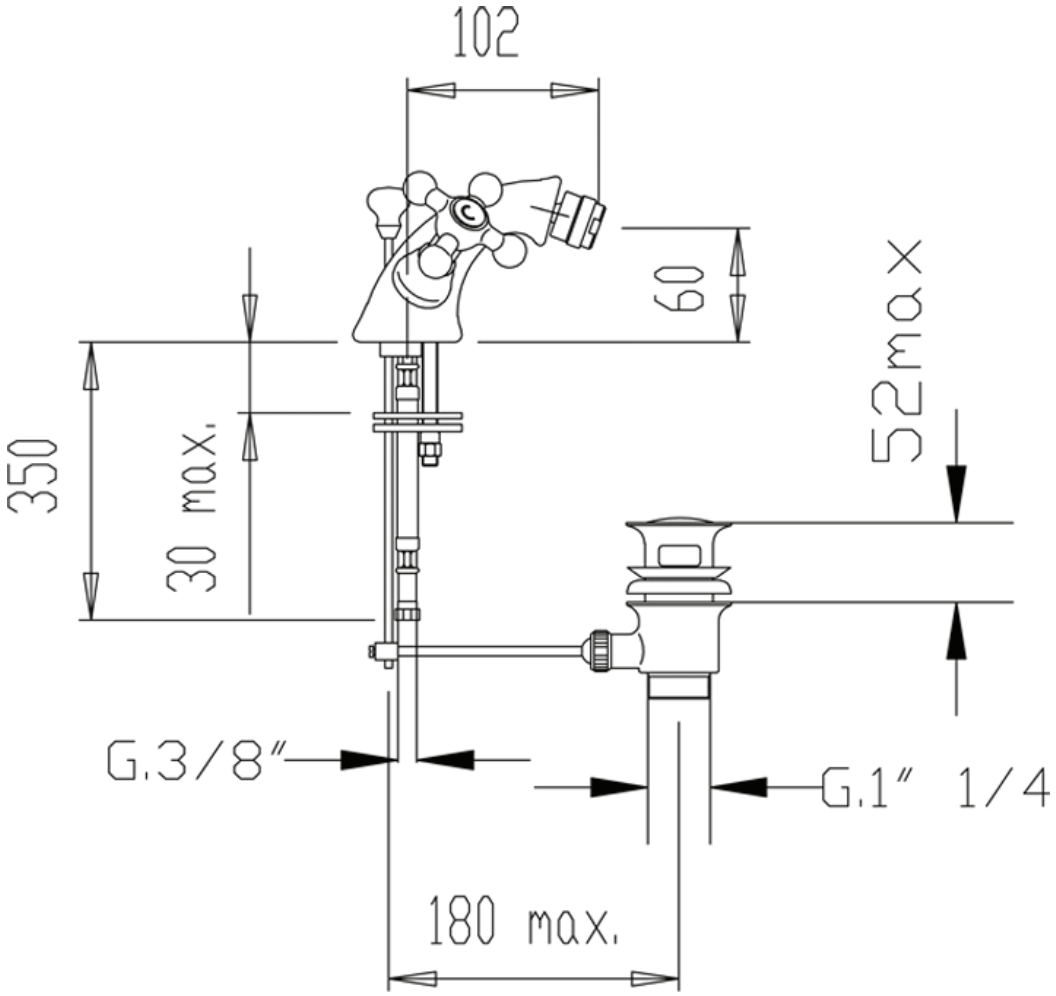
Sterling - art 2305