Fromac
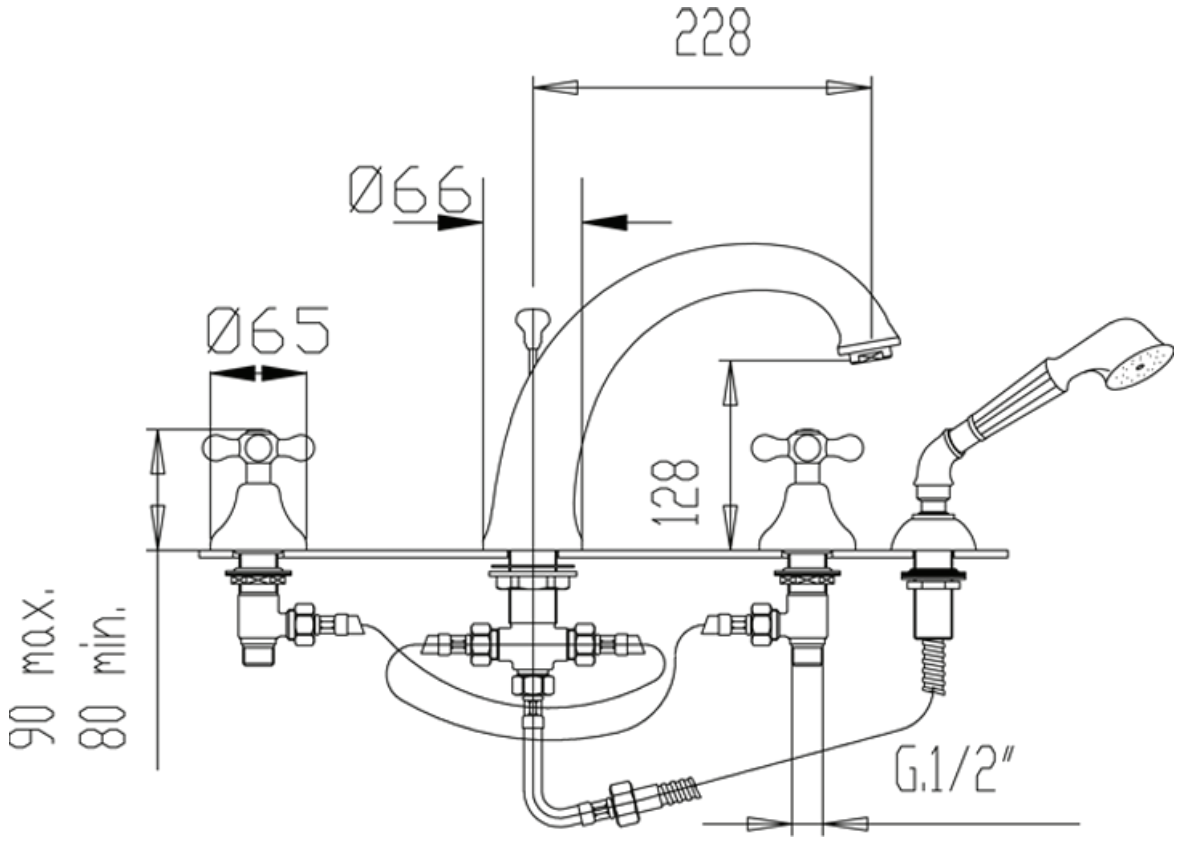
Sterling - art 2228